CompactDX®

Lab in a box

Compact | Accurate | Rewarding

Find more information at **www.mylabglobal.com**

CE IVD

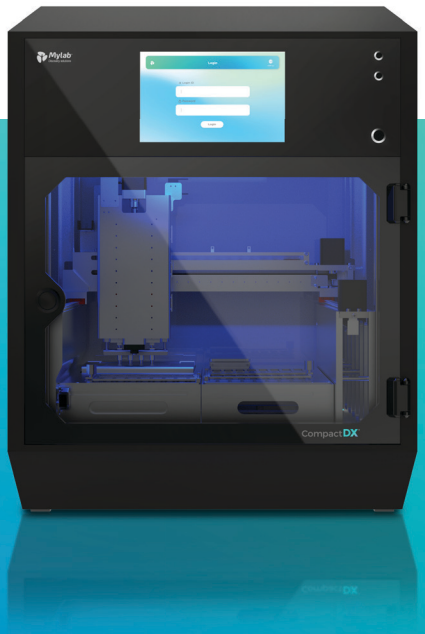

Single Touch sample to Reporting

The Compact DX® is a sample-to-result portable automation system that eliminates the huge infrastructure and capital cost of the molecular lab.

The machine is designed to automate all lab operations from nucleic acid (DNA/RNA) extraction to real time PCR analysis with the flexibility to test multiple parameters with multiple samples at the same time - something that was never available before.

Automated barcode reading, auto-feed protocol, self sanitization, and LIMS connectivity defines Compact DX® as a complete walk-away system.

Features

Applications
Routine labs, hospitals, blood banks, primary healthcare centres etc.

Mobile labs technology
RT-PCR + Extraction system

Regulatory status
CE-IVD , CDSCO approved

Number of sample
8/16/32/96

Samples device type
Benchtop

Operation
Fully automated and integrated system require minimal skilled person for operation

Sample Testing Parameters
8 Parameters per sample

Turn around time (TAT)
Less than 2 hours from sample to result

Test Areas
Molecular

Compact DX®

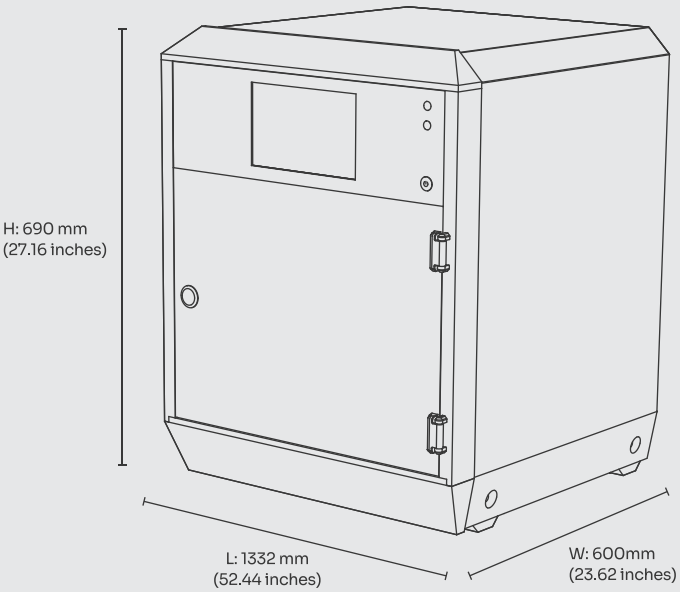

Machine Specification

Physical dimensions console

H: 690 mm L: 1332 mm
W: 600 mm Weight: 85 kg

Sample per run

1 to 8 in parallel

Sample processing

Simultaneously can run 8 samples, At the same time in a network, it can run 8/16/32/96 samples

Instrument type

Standalone system PC / Laptop connection available USB connection available, external devices such as printer connections available

Power backup

5 KVA UPS for 4 hours

Power requirement console

Power input: 720w
Rated frequency: 50 hz
Rated current: 3.15 a
rates voltage: 220-240vac

Application

Sample to result

Decontamination

Inbuilt uv lamps for self sanitization

Sample volume range

30 ul to 1 ml

Data transfer

Local and remote access

Operating conditions

+5˚C to +40˚C

Test availables

PathoDetect®

Kit Name	RXN (50) Kit Cat. No.	RXN (100) Kit Cat. No.
HIV-1 Quantitative PCR KIT Extraction Kit	PHIVQC50	PHIVQC100
HCV Quantitative PCR Kit	PHCVQC50	PHCVQC100
HBV Quantitative PCR Kit	PHBVQC50	PHBVQC100
Respiratory Bacterial Panel	PRBL50	PRBPL100
Respiratory Viral Panel	PRVPL50	PRVPL100
MTB Detection Kit	PMTBSCP50	PMTBSCP100
MTB Rif/INH Resistance Detection Kit	PMRID50	PMRID100
Dengue Detection Kit	PDDCP50	PDDCP100
Chikungunya Detection Kit	PCDCP50	PCDCP100
CHIK-DEN Multiplex PCR Kit	PCDM50	PCDM100
CMV Quantitative PCR Kit	PCMVL50	PCMVL100
Rubella Detection Kit	PRDP50	PRDP100
HSV (Type 1&2) Detection Kit	PHSVL50	PHSVL100
Leptospira Detection Kit	PLEPP50	PLEPP100
Legionella PCR Detection Kit	PLDWP50	PLDWP100
HAV/HEV RT PCR Detection Kit	PHSVDP50	PHSVDP100
Neonatal Sepsis Panel	PNSPL50	PNSPL100
HPV PCR Detection Kit (Type 16/18)	PHPVDP50	PHPVDP100
HCV Genotyping PCR Kit	PHCVGP50	PHCVGP100
Malaria Detection Kit	PMDP50	PMDP100
Extended Fever Panel	PEMFPA50	PEMFPA100

OncoScreen™

BCR-ABL1 Mbcr Quantitative PCR Kit	OBBQP50	OBBQP100
BCR-ABL1 Mbcr, mbcr and µ-bcr Quantitative PCR Kit	OBBEQP50	OBBEQP100
EGFR Mutation Detection Kit (L858R & T790M)	OEDP50	OEDP100
KRAS Muation Detection Kit (Codon 12 & 13)	OKDP50	OKDP100
JAK2 Mutation Detection Kit (V617F)	OJMSP50	OJMSP100
ALK Mutation Detection Kit Variant (1-3/5)	OADP50	OADP100
BRAF Mutation Detection Kit (V600E)	OBMDP50	OBMDP100
HER2 DNA Amplification Kit	OHAP50	OHAP100
MTHFR Genotyping Kit (A222V and A1298C)	OMGP50	OMGP100
PML RARA bcr1 and bcr3 Quantitative PCR Kit	OPLSQP50	OPLSQP100

DiscoverSeries®

Fragile X FMR1 and FMR2 Detection Kit	DFXP50	DFXP100
Y Chromosome Microdeletion Extensive Detection Kit	DYMDP50	DYMDP100
DMD Mutation Detection Kit	DDMDP50	DDMDP100
CFTR Mutation Detection Kit	DCMDP50	DCMDP100
β-Thalassemia Mutation Detection Kit	DTMDP50	DTMDP100
FVL (R506Q) Mutation Detection Kit	DFVDP50	DFVDP100
Ankylosing Spondylitis Detection kit	DHLADP50	DHLADP100

NATSpert® Blood Screening Kit

NATSpert® Kit	NSIDA32	NSIDA100

ID Triple H Blood Screening Kit

NATSpert® ID Triple H Detection Kit	NSID100	NSID500

Mylab Discovery solutions

Mylab Discovery Solutions Pvt. Ltd.
Global Innovation Center (GIC)5th Floor, Amar Paradigm, Survey No - 110/11/3, Baner Rd, Pune - 411045,Maharashtra,India.
Email: info@mylabglobal.com | **Web:** www.mylabglobal.com

CoviSelf | **CoviSwift** | **PathoDetect** | **NATSpert** | **PathoCatch** | **OncoScreen** | **DiscoverSeries** | **AgroDex** | **VetScreen** | Compact **XL**

mylabglobal.com mylabsolutions mylabsolutions mylabdiscoverysolutions mylabdiscoverysolutions

Disclaimer: All rights reserved. All content (texts, trademarks, illustrations, photos, graphics, files, designs, arrangements, instruments etc.) are protected by our Intellectual Property (IP) including Patents, Copyright, Trademark and other protective laws. Any attempt for infringement of IP vested in our products, for any purpose whatsoever, without taking prior written license from Mylab would amount to infringement and may be harmful involving high risk to life and may result in fatal injury. **For enquiries related to IP licensing, please write to legal@mylabglobal.com**